PolarView®-ND(212)-AR

PRODUCT SPECIFICATION

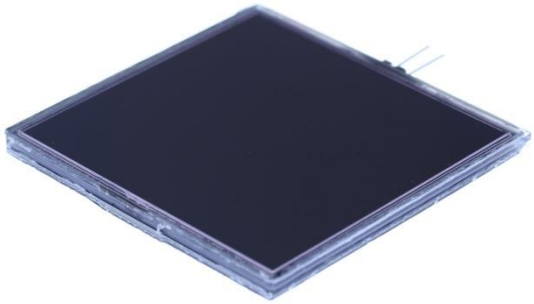

Content

1. Revision history 2
2. Product description 2
3. Ordering information 2
4. Custom designing 2
5. General specifications 3
6. Absolute maximum ratings 3
7. Electro-optical specifications 3
8. Typical values 4
9. Drive voltage and recommended controller 7
10. Measurement methods and definitions 8
11. Mechanical dimensions 11
12. Electrical connection and wiring 12
13. Handling precautions 13

1. Revision history

Revision	*Revision date*	*Revision content*
Initial release	2015-11-30	-
A	2016-02-15	Product name changed.
B	2017-01-30	Standard sizes, contact pins, and mechanical dimensions updated. f-stop reduction voltages, closing and opening times updated.

2. Product description

The PolarView®-ND(212) is a liquid crystal (LC)-based variable ND filter that controls the light transmittance by an externally applied drive voltage. Compared to conventional mechanical variable filters, LC variable ND filters are electro-optical; they contain no moving parts, are completely vibration-free, and have a small footprint.

The variable ND filter consists of a polarization modulator in form of LC cells positioned between polarizers. Applying the drive voltage reorients the birefringent LC molecules, changing the phase retardation of light passing through the LC cell. This results in a change in transmittance of light passing through the full variable ND filter structure. Analogue gray-scale operation between fully open and closed states is realized by voltage amplitude modulation.

The patented PolarView®-ND model is specifically designed for operation as neutral density (ND) filter in various camera applications. It offers uniform angular transmittance properties together with small color shift, not only at the fully open and closed states, but also at intermediate gray-levels.

Note: For best performance, the recommend operation transmittance range of the PolarView®-ND(212) is 12.5% to 0.098%, corresponding to f-stop reduction 3 to 10.

For demanding optical applications, the PolarView®-ND(212)-AR is supplied with an optical quality, high-efficiency AR (anti-reflective) cover glass laminated to both sides of the variable ND filter. This configuration minimizes surface reflection, beam deviation, and wavefront aberration, and is especially recommended for imaging applications.

3. Ordering information

Product	*Part number*
50x30_PolarView®-ND(212)-AR	LCT-179
2x2_PolarView®-ND(212)-AR	LCT-180
LCC-230 Controller	LCT-030

To purchase or for more information, please contact us at: info@lc-tec.se or +46 243 79 40 70.

4. Custom designing

Customers not finding their required variable ND filter properties are advised that other variable filter (shutter) models are available and that further optimization and custom designing are possible, both in terms of electro-optical properties and mechanical dimensions (up to 14”x16” size).

5. General specifications

	PolarView®-ND(212)-AR
Technology	Nematic LC
Mode of operation	Normally black
Side 1 polarizer transmission axis[1]	N/A, circular polarizer
Side 2 polarizer transmission axis[1]	-45°
LC cell substrate material	Polished soda lime glass
Polarizer type and material	Absorptive type polymer
AR substrate material	Polished soda lime glass
Scratch resistance	N/A

6. Absolute maximum ratings[2]

	PolarView®-ND(212)-AR
Operating temperature[3]	-10°C to +60°C
Storage temperature[3]	-10°C to +60°C
Drive voltage amplitude	≤5V
Drive voltage frequency	≤1kHz AC square waveform

7. Electro-optical specifications[4]

	PolarView®-ND(212)-AR
Open state transmittance[5]	≥24% / f-stop reduction ~2 @ V_D=4.5V Recommended maximum transmittance: 12.5% / f-stop reduction 3
Closed state transmittance[5]	≤0.024% / f-stop reduction 12 @ V_D=0V Recommended minimum transmittance: 0.098% / f-stop reduction 10
Contrast	≥1,024:1 128:1 for recommended transmittance range
Color	Δu' and Δv ≤0.02 from CIE D65 for recommended transmittance range
Angular dependence	Transmittance variation within -22.5° ≤ θ ≤-22.5° for 1.56% / f-stop reduction 6 Horizontal: 1.2% to 2.1% / Vertical: 1.1% to 2.1%
f-stop reduction 3 voltage	2.85V ± 0.2V
f-stop reduction 6 voltage	2.20V ± 0.2V
f-stop reduction 10 voltage	1.85V ± 0.2V
Closing time (T_{100}-T_{10})	≤15ms @ V_D=4.5V
Opening time (T_0-T_{90})	≤10ms @ V_D=4.5V
Switching time between f-stop reductions	≤80ms for all switches ≥1 f-stop reduction
Reflectance per surface	≤0.5%
Surface quality	60/40 scratch/dig
Wavefront aberration and MTF	Available upon request
RMS average power consumption[6]	≤28mW
Peak current[6]	≥32mA

[1] Refer to drawing in section 10.6.
[2] Reliability tests performed over a range of environmental conditions according to standard IEC 61747-5.
[3] Dry, no condensation.
[4] The specified values are valid for the 2x2 size and measured at room temperature (23°C ± 3°C).
[5] Refers to unpolarized incident light.
[6] As measured with f=60Hz, V_D=12V AC square drive waveform with transition slew rate of 3.5V/µs. Actual figures will vary with waveform slew rate, amplitude, frequency, and variable ND filter size. Also see section 9.

8. Typical values (PolarView®-ND(212)-AR @ room temperature unless other specified)

8.1. Transmittance vs. wavelength

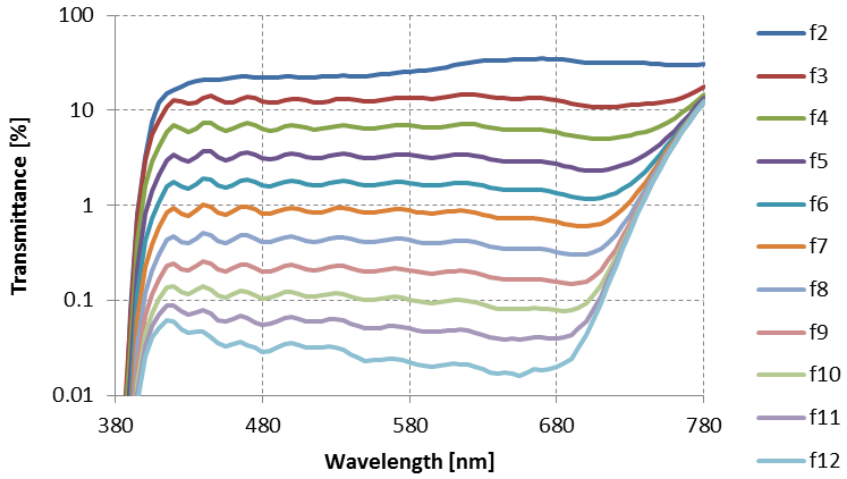

8.2. Color

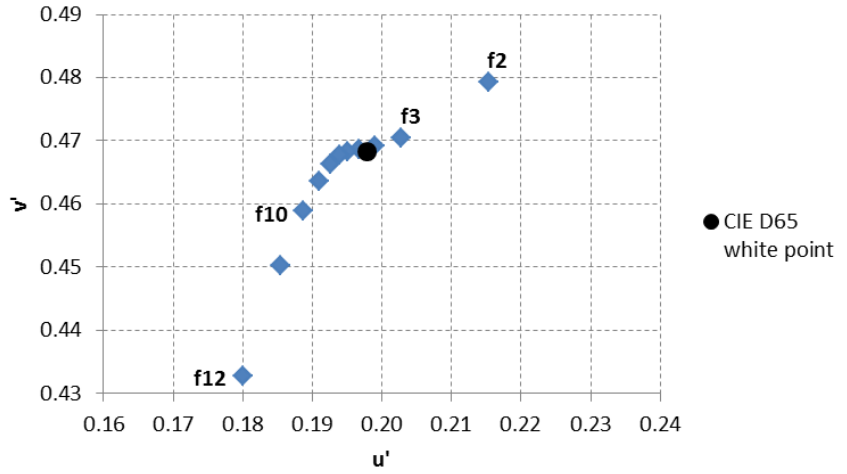

8.3. Transmittance vs. drive voltage

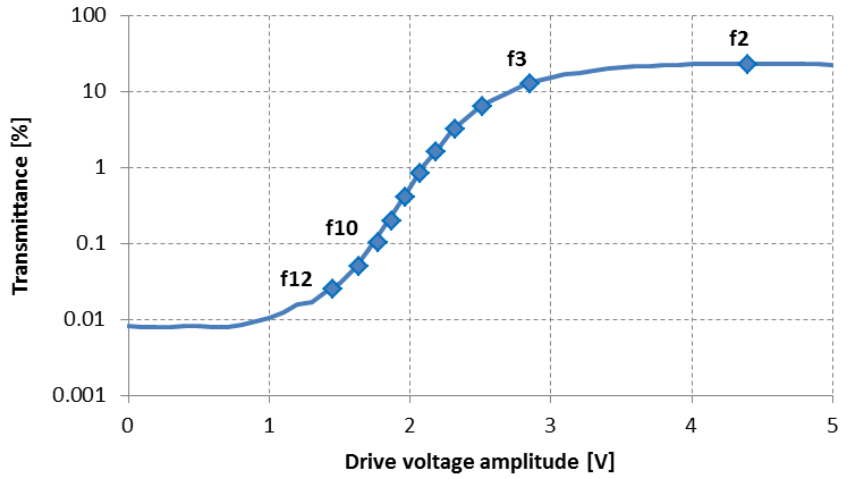

8.4. Angular transmittance

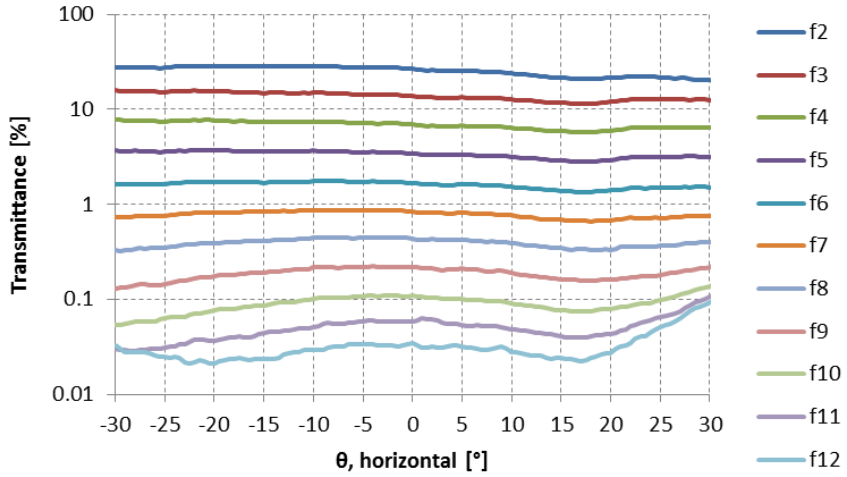

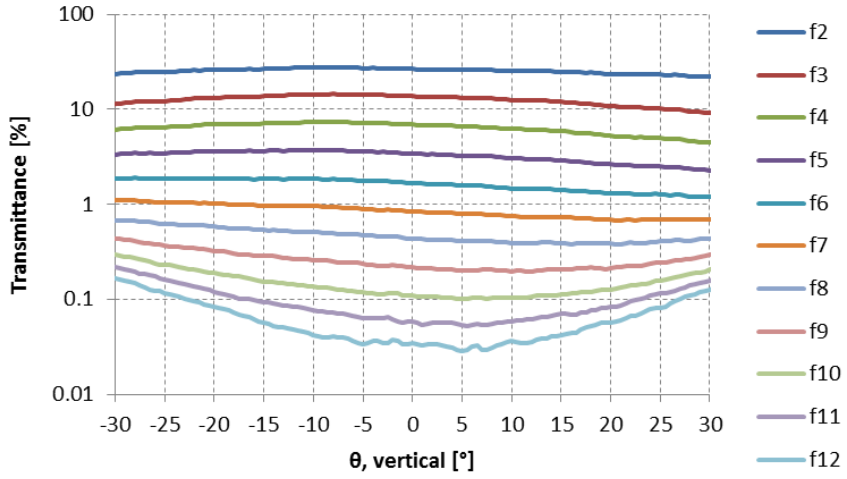

8.5. Angular transmittance PolarView®-ND(212) vs. FOS comparison

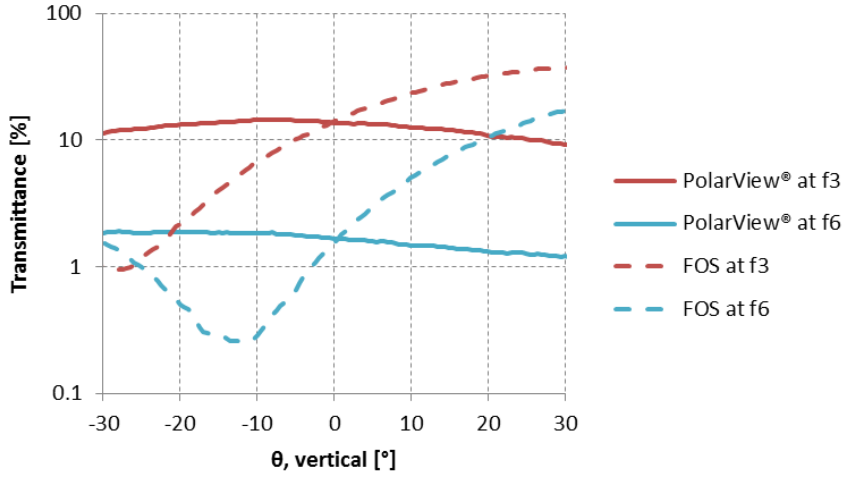

8.6. Gray-scale switching times (ms)

Final f-stop reduction

Initial f-stop reduction	12	11	10	9	8	7	6	5	4	3	2
12		-	-	51	57	56	54	49	39	29	8
11	-		-	48	54	56	53	48	40	29	9
10	-	-		43	51	52	49	44	37	27	8
9	14	19	31		45	48	46	42	35	26	8
8	14	18	26	38		42	42	39	33	25	7
7	12	15	23	30	38		38	35	30	23	7
6	11	13	19	25	30	36		32	28	22	6
5	10	12	16	20	24	28	31		26	20	6
4	9	11	14	17	20	23	26	27		19	5
3	9	10	13	15	17	19	21	22	23		5
2	11	12	14	15	17	19	20	22	22	21	

9. Drive voltage and recommended controller

The variable ND filter possesses mono-stable normally black operation, meaning that without voltage applied the variable ND filter is in its fully closed, light-absorbing state. Applying the drive voltage, V_D, switches it to an open, light-transmitting state. This voltage must be kept throughout the duration of the time the variable ND filter is required to be in the open state. In general, increasing the drive voltage amplitude increases the contrast and shortens the opening time.

The transmittance of the variable ND filter reacts to the RMS voltage. In order to prevent ion migration within the LC layer that might impair variable ND filter performance and lifetime, it is recommended to ensure that there is no net DC bias present in the drive signal. This is best achieved via use of one of the two AC square waveforms illustrated below. When the top alternative is used, the **recommended minimum frequency is 80Hz** if visual flicker is to be avoided. The bottom option is suitable when cycled operation between open and closed states is desired.

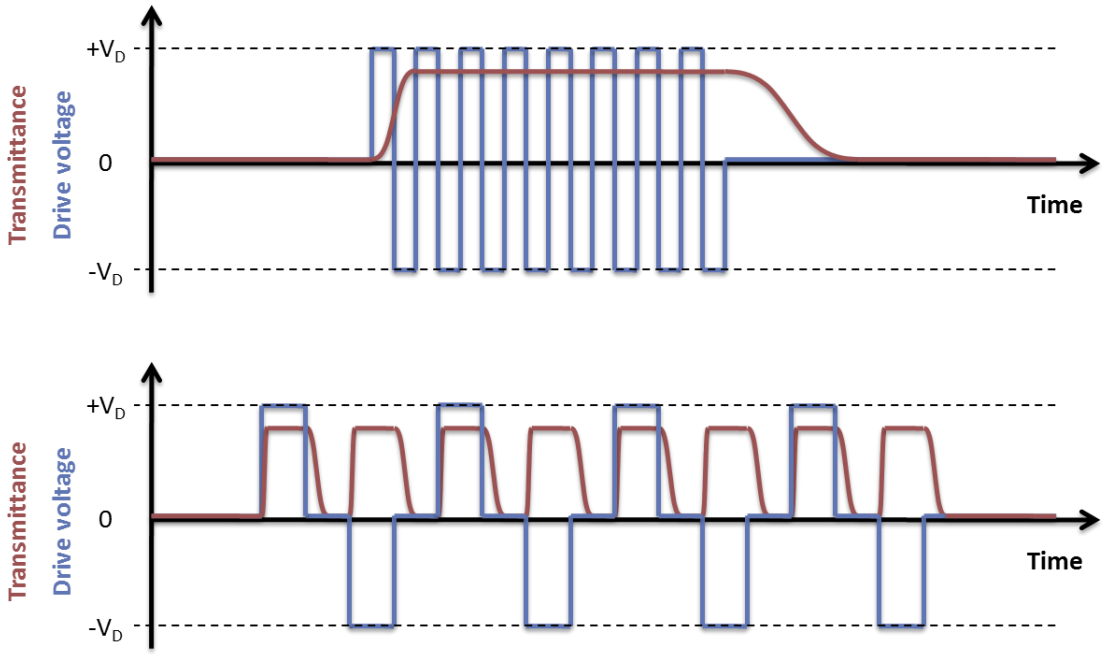

The LCC-230 (*LC-Tec Part number LCT-030*) is a flexible, full-featured liquid crystal controller specifically designed to drive all FOS, X-FOS, PolarSpeed®, and PolarView® models (but not the FSD, requiring high-voltage driving). The LCC-230 incorporates two independent LC channels, each with $30V_{RMS}$ of range and fully short-circuit protected. The controller is operated by the LCDriver2 application via a full-speed USB 2.0 compliant interface. LCDriver2 permits dynamic editing of programs up to 96 lines in length. Three trigger modes (internal, line, program) determine how program lines are executed. Up to nine programs may also be pre-stored on the LCC-230 for stand-alone operation. See user manual for further information.

Note: Customer-developed LC drive stages must be able to deliver at least the peak current of the specific FOS device to be driven. Output-stage ballast capacitors with a maximum ripple current rating at least three times the peak current is recommended.

10. Measurement methods and definitions

10.1. Transmittance, color, and contrast

The transmittance is defined as the luminous transmittance of collimated unpolarized light passing perpendicularly through the variable ND filter according to:

$$T = \frac{\int_{380}^{780} T(\lambda)D(\lambda)P(\lambda)d\lambda}{\int_{380}^{780} D(\lambda)P(\lambda)d\lambda}$$

where T(λ) is the transmittance function of the variable ND filter, D(λ) is the illuminant spectral distribution, and P(λ) is the photopic response of the human eye. All transmittance values specified are based on the standard illuminant **CIE D65** (daylight). The corresponding color is mathematically described using the color matching functions of the CIE 1931 Standard Colorimetric Observer, and is represented by a point in the u',v' chromaticity coordinate system.

The contrast is defined as the ratio of the transmittance of the open field-on state to that of the closed field-off state according to:

$$C = \frac{T_{open\ (V=V_D)}}{T_{closed\ (V=0)}}$$

Since the transmittance depends on applied drive voltage, also the contrast is a function of the voltage and usually increases with increasing amplitude.

10.2. Transmittance, f-stop reduction, and NDnumber notation

Transmittance, f-stop reduction, and NDnumber notation are related according to the table below.

Transmittance	*f-stop reduction*	*NDnumber notation*
25%	2	ND4
12.5%	3	ND8
6.25%	4	ND16
3.125%	5	ND32
1.563%	6	ND64
0.781%	7	ND128
0.391%	8	ND256
0.195%	9	ND512
0.098%	10	ND1024
0.049%	11	ND2048
0.024%	12	ND4096

10.3. Angular dependence

The transmittance is not only a function of light wavelength and applied drive voltage. Since the phase retardation induced by the LC cell also depends on the angle between the direction of light and the long axis of the LC molecules, the transmittance of the variable ND filter can for a given angle of incidence be described by:

$$T = T(\theta, \phi, \lambda, V_D)$$

where θ is the polar angle between the light exit direction and the normal vector to the surface, and ϕ is the azimuth angle of the light exit direction as specified below.

The angular dependence of the transmittance or of the contrast between the open and closed states in diffuse light is often illustrated in a so-called polar plot as shown below. Iso-transmittance or iso-contrast lines describe the transmittance or contrast values at various angles. The center of the plot corresponds to light exiting perpendicularly from the variable ND filter surface.

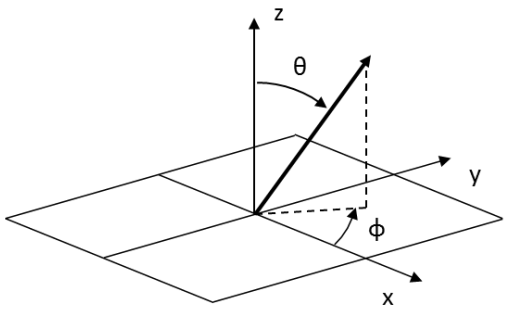

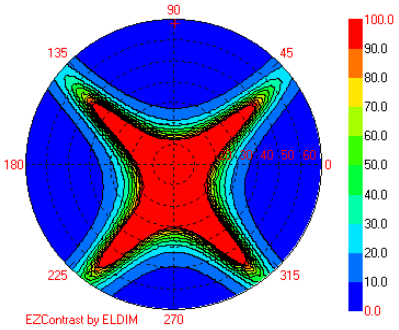

10.4. f-stop voltage

The f-stop voltage represents the point on the transmittance vs. applied drive voltage curve where the variable ND filter is switched to a certain f-stop reduction (gray level) between fully closed and open states. For example, the f6 voltage corresponds to a transmittance level of 1.56%.

10.5. Switching times

Two switching times are associated with the variable ND filter. The time for opening the variable ND filter, opening time (also called response time or t_{on} time), is defined as the time it takes for the variable ND filter to switch from 0% to 90% (T_0-T_{90}) of its static open transmittance after the drive voltage is applied. The opening time usually decreases with increasing drive voltage amplitude and increasing temperature.

The corresponding time for closing the variable ND filter, closing time (also called relaxation time or t_{off} time), is defined as the time it takes for the variable ND filter to switch from 100% to 10% (T_{100}-T_{10}) of its static open transmittance after the drive voltage is switched off. The closing time is less dependent of the drive voltage amplitude, but decreases with increasing temperature.

The same definitions also hold for gray level switching between various f-stop reductions.

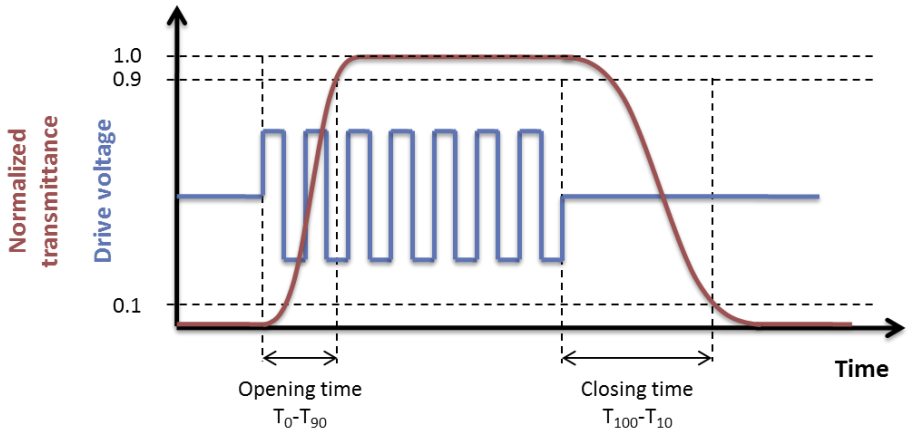

10.6. Polarizer transmission axis

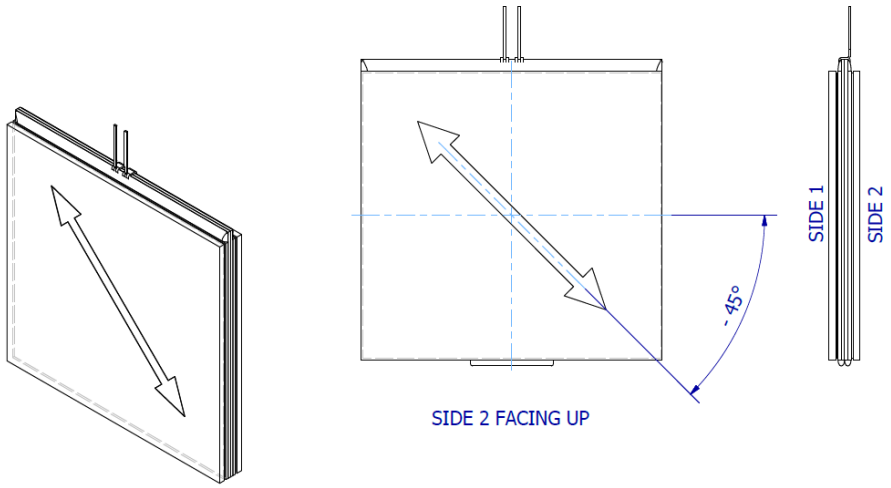

11. Mechanical dimensions[7]

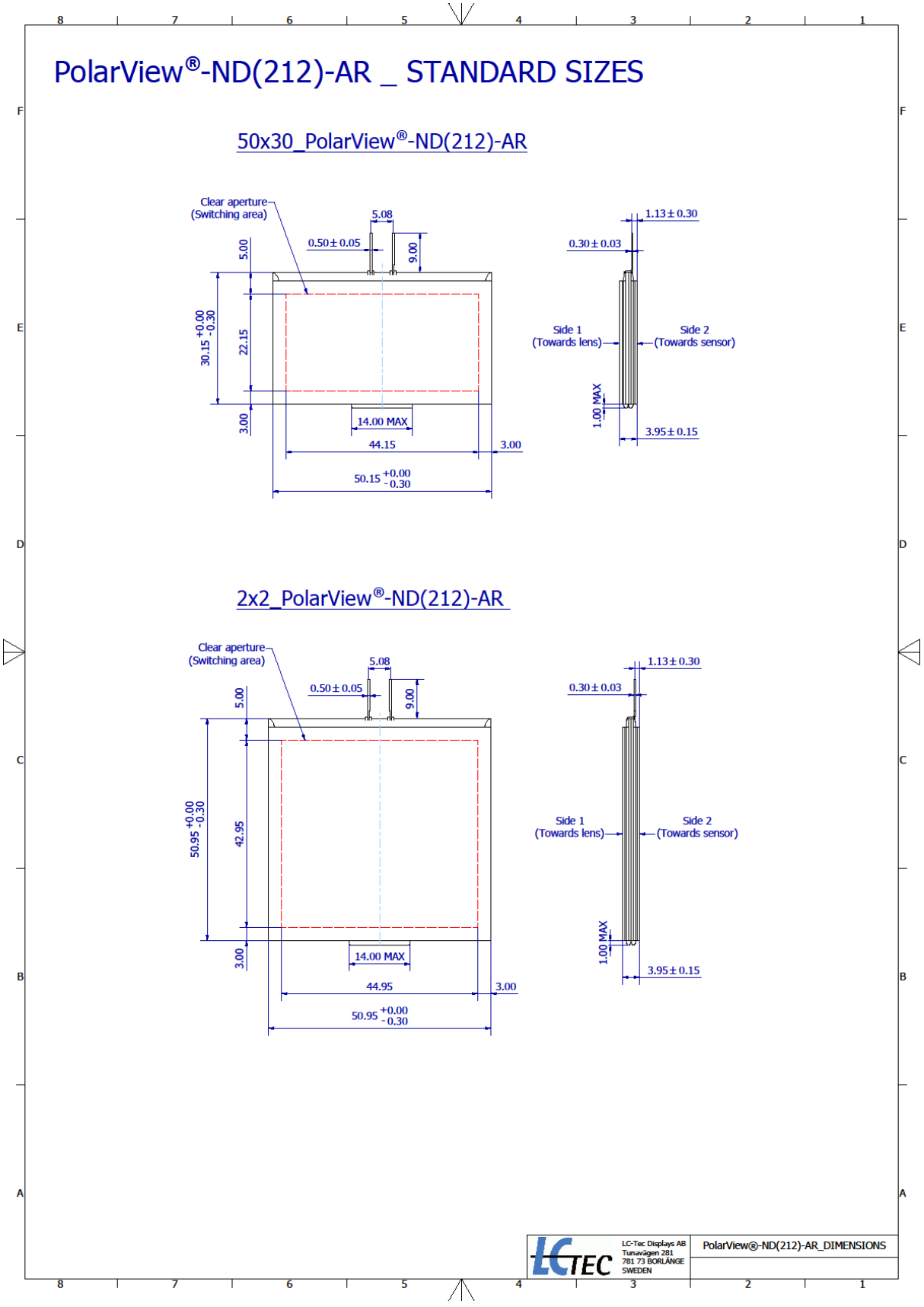

[7] Refers to available standard sizes. Custom designing up to 14”x 16” size is offered.

12. Electrical connection and wiring

The desired waveform should be applied to the variable ND filter via the connectors present on the LC cells. The variable ND filters are supplied with contact pins as standard as illustrated in the mechanical dimensions drawings. The pin design is compatible with readily available 5.08mm pitch connectors (for example Molex Part Number 90123-0103). Customers can also solder wires to the pins, alternatively connect them directly to a dedicated printed circuit board (PCB) if desired.

Custom designed connector solutions, including variations of pins, flexible flat cable (FFC), and wires, can be provided upon request.

13. Handling precautions

The following provides recommendations for handling of this product.

LC variable ND filter handling and cleaning precautions

- A protective film is supplied on both sides of the variable ND filter and should be left in place until the variable ND filter is required for operation.
- The variable ND filter has an optical quality, high-efficiency AR cover glass laminated to both sides of the shutter, please guard against scratching, do not rub with abrasives.
- Keep the variable ND filter surface clean. Do not touch without protective gloves.
- Should the surface become contaminated, wipe lightly with a soft cloth moistened with solvent (isopropyl alcohol or ethyl alcohol) in order to clean the variable ND filter surface.
- Do not wipe the variable ND filter surface with dry or hard materials that may damage the surface. Do not use the following solvents for cleaning: water, aromatics, acetone or other ketone.
- Since this variable ND filter contains glass substrates, avoid applying mechanical shock or pressure. Do not drop, bend, twist or press on the variable ND filter.

Storage

- Avoid exposure to direct sunlight or high temperature and humidity. Recommended storage conditions: temperature range +5°C to +45°C with humidity <60%RH.
- Do not store the variable ND filter near organic solvents or corrosive gases.
- Keep the variable ND filter protected from vibration, shock, and pressure.

Operating precautions

- It is important to operate the variable ND filter within the specified voltage limits; higher voltages may significantly reduce the lifetime of the variable ND filter.
- The use of direct current drive (DC voltage) should be avoided since a reaction stimulated by such current significantly reduces the lifetime of the variable ND filter.
- The switching speed of the variable ND filter will be reduced at lower temperatures, and the variable ND filter will show a dark color at higher temperatures. However, the variable ND filter will revert to normal operation once the temperature conditions return to the range for normal operation.

Safety

- Should the variable ND filter become damaged and the skin is exposed to liquid crystal material, it is recommended to immediately wash off the liquid crystal material using soap and water.
- If the liquid crystal material should come into contact with the eye, flush the eye using running water for at least five minutes. Seek medical advice.